Titre / Title

RF LOADS FIXED COAXIAL
DC – 22 GHz

DETAIL SPECIFICATION

Rédigé par / Written by	**Responsabilité / Responsibility**	**Date**	**Signature**
S. POIZAT	Space Project Manager	22/12/2022	
Vérifié par / Verified by			
V. EUDELINE	Space B. U. Manager	22/12/2022	
Approuvée par / Approved by			
M. CURTY	Space Quality Manager	22/12/2022	

Reproduction interdite / Reproduction forbidden

DOCUMENTATION CHANGE NOTICE

REVISION OR ISSUE	DATE	CHANGE
1/-	21/11/2016	Initial edition
1/A	19/09/2018	Points of frequency updated for Electrical measurement and Connector repeatability (§5): 2-8-12.4-18 & 22GHz instead of 4-8-12.4-20 & 22GHz
2/-	22/12/2022	Updated to change drift requirement for VSWR and impedance in Table 3 and 6 (according with NCCS S21006)

Reproduction interdite / Reproduction forbidden

TABLE OF CONTENTS

1. Scope 4
2. Applicable document 4
3. Type variant 5
4. Maximum ratings 5
5. Electrical measurements 6
5.1. High and Low temperature electrical measurements 6
6. Connectors repeatabilty: 6
7. Operating life 6
7.1. Parameter drift values 6
7.2. Conditions for operating life 6
8. Mechanical dimension 7
8.1. Dimension for variant 01: Stainless steel passivated 7
8.2. Dimension for variant 02: Gold plated with nickel underplate 8
8.3. Interchangeability for SMA 9
8.3.1. SMA plug 9

LIST OF TABLES AND FIGURES

Table 1: *Type variants* 5
Table 2: *Maximum ratings* 5
Table 3: *Parameter drift values for Operating Life* 6
Table 4: *Conditions for Operating Life testing* 6
Table 5: *Radiall Part Number* 10
Table 6: *Measurements and inspections on completion of environment and endurance tests* 11

FIGURE 1 – *Parameter Derating Information* 5
FIGURE 2 – *Circuit for electrical measurement* 7

Reproduction interdite / Reproduction forbidden

1. SCOPE

This Detail Technical Sheet details the ratings and electrical characteristics for RF Load Fixed, 0 -22 GHz

2. APPLICABLE DOCUMENT

The following documents shall be read in conjunction with this specification:

RAD-GEN-ATCH-002: General Specification: Attenuators and Loads RF Fixed Coaxial

Reproduction interdite / Reproduction forbidden

3. TYPE VARIANT

Variant of the basic type covered by the relevant Generic Specification are given Table 1.

Table 1: *Type variants*

VARIANT	VSWR	
	0 ≤ F ≤ 18 GHz	18 ≤ F ≤ 22 GHz
01	1.10	1.15
02	1.10	1.15

4. MAXIMUM RATINGS

Maximum Ratings of the basic type covered by the relevant Generic Specification are given Table 2.

Table 2: *Maximum ratings*

N°	Characteristics	Symbol	Maximum Rating		Unit
			Min	Max	
1	RF Power Variant 01 Variant 02	 P P	 - -	 2 1	 W (1) W (1)
2	Peak Power (at 25°) (2)	Pp	-	100	W
3	Operating Temperature Range	T_{op}	-55	+125	°C
4	Storage Temperature Range	T_{stg}	-55	+125	°C
5	Frequency Range	F	0	22	GHz
6	Impedance	Z	47.5	52.5	Ohms
7	RF Leakage	E	-90	-	dBi
8	Coupling Nut Torque	Tq	80	120	N.cm

NOTES: (1) See Figure 1.
(2) Duration 1µs, cyclic rate 1ms

FIGURE 1 – *Parameter Derating Information*

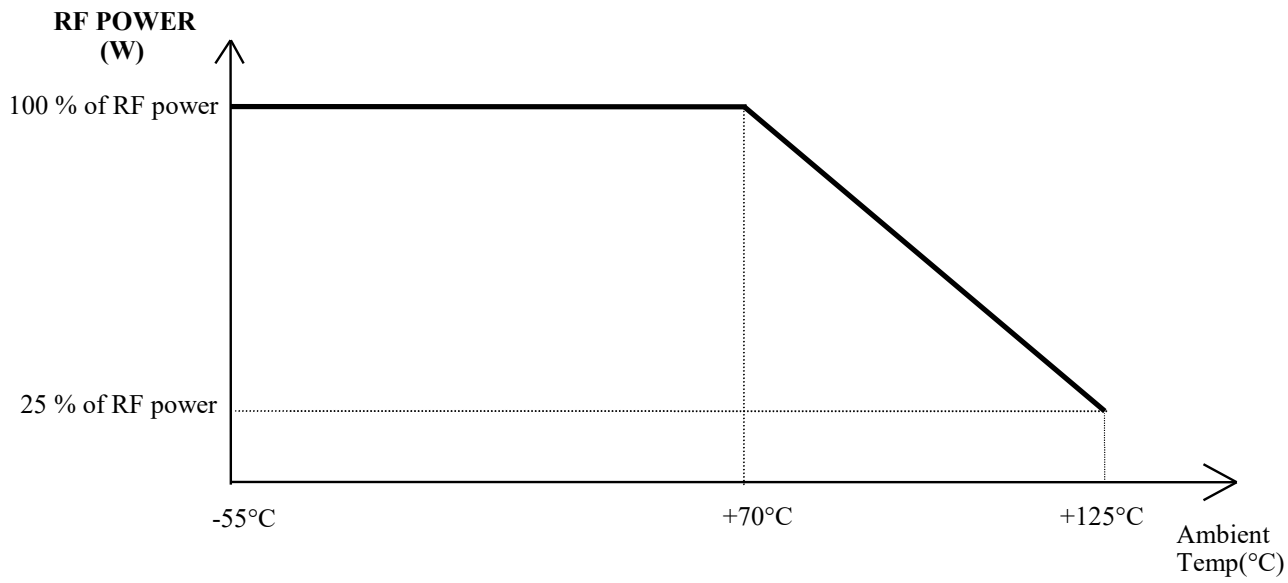

RF POWER VERSUS TEMPERATURE

Reproduction interdite / Reproduction forbidden

5. ELECTRICAL MEASUREMENTS

The parameters to be measured at room temperature are scheduled in Table 1. Unless otherwise specified, the measurements shall be performed at T_{amb} = +22 ± 3 °C.
The measurement shall be performed with five points of frequency:

2GHz – 8GHz – 12.4 GHz – 18GHz - 22 GHz.

5.1. HIGH AND LOW TEMPERATURE ELECTRICAL MEASUREMENTS

Characteristics	Symbol	Test Method and Conditions (Note 1)	Maximum Rating		Unit
			Min	Max	
Temperature coefficient of Resistance	TC_R	DC test reference temperature	-	3×10^{-4}	Ω/Ω/°C

Note 1: Measurements shall be performed during LAT or Qualification test

6. CONNECTORS REPEATABILITY:

Not applicable for loads.

7. OPERATING LIFE

7.1. PARAMETER DRIFT VALUES

The parameter drift values applicable to burn-in are specified in Table 3 of this specification. Unless otherwise stated, measurements shall be performed at T_{amb} = +22 ± 3 °C. The parameter drift value (Δ) applicable to the parameters scheduled, shall not be exceeded. In additional to these drift value requirements for a given parameter, the appropriate limit value specified in Table 1 shall not be exceeded.

7.2. CONDITIONS FOR OPERATING LIFE

The condition for Operating life are given in Table 4. After test, a visual inspection shall be performed and no damage shall be appeared.

Table 3: *Parameter drift values for Operating Life*

N°	Characteristics	Symbol	Test condition	Limits	Unit
1	Resistance change	ΔR	As per Table 1	±2	Ω
2	VSWR change	$\frac{\Delta VSWR}{VSWR}$	As per Table 1	±4	%

Table 4: *Conditions for Operating Life testing*

N°	Characteristics	Symbol	Limits	Unit	Note
1	RF Power	P_{in}	2 1	W W	For Variant 01 For Variant 02
2	Frequency	F	DC(1) or 10 or 18	GHz	-
3	Ambient Temperature	T_{amb}	+25	°C	-

NOTES: (1) The dissipated power at DC or in frequency is the same.

Reproduction interdite / Reproduction forbidden

FIGURE 2 – *Circuit for electrical measurement*

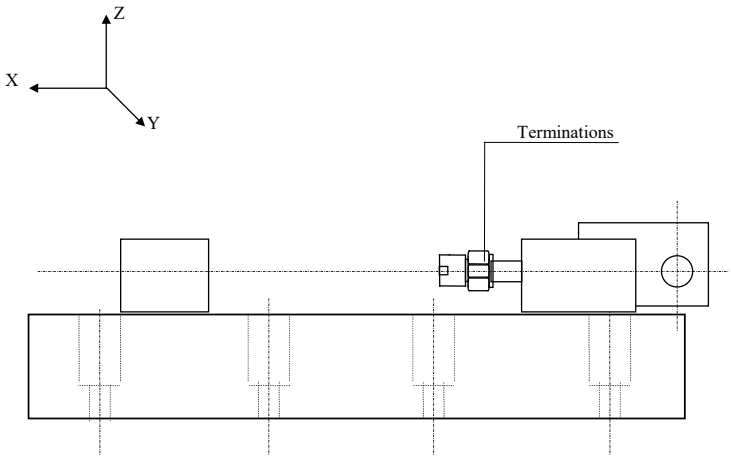

Schematic for Vibration and Shock or Bump test

8. MECHANICAL DIMENSION

8.1. DIMENSION FOR VARIANT 01: Stainless steel passivated

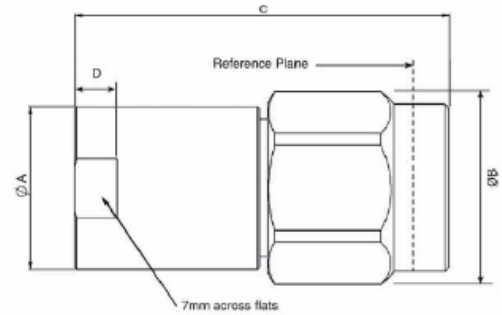

Symbols	Dimensions mm	
	Min	Max
ØA	-	7.7
ØB	8.5	9.5
C	-	16.5
D	1.9	2.3

:

Connectors: SMA male per ESCC3402
Weight: ≤ 5 grams
Material and Finishes:

- Shell: Amagnetic Stainless Steel, electro-passivated
- Coupling Nut: Amagnetic Stainless Steel, electro-passivated
- Centre Contact: Beryllium Copper, with nickel underplate (2µm minimum) and gold plating (1.3µm minimum). Measurements of plating thickness shall be performed inside the female centre contact at a maximum distance of 0.4mm from the end and on the male centre contact on pin diameter Øt (see Interface Dimensions).
- Inserts: PTFE

Reproduction interdite / Reproduction forbidden

8.2. DIMENSION FOR VARIANT 02: Gold plated with nickel underplate

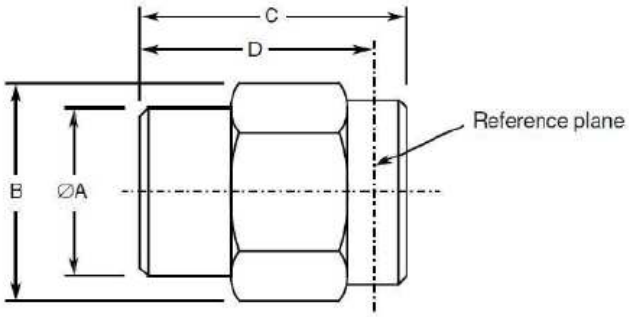

Symbols	Dimensions mm	
	Min	Max
ØA	6.2	6.4
B	7.8	8
C	-	12
D	-	10.5

:

Connectors: SMA male per ESCC3402

Weight: ≤ 3.5 grams

Material and Finishes:

- Shell, Coupling Nut, Centre Contact: Beryllium copper, with nickel underplate (2µm minimum) and gold plating (2.5µm minimum). Measurements of plating thickness on the centre contact shall be performed on pin diameter ∅I (see Interface Dimensions).
- Inserts: PTFE
- Gaskets: Silicone rubber

Reproduction interdite / Reproduction forbidden

8.3. INTERCHANGEABILITY FOR SMA

8.3.1. SMA plug

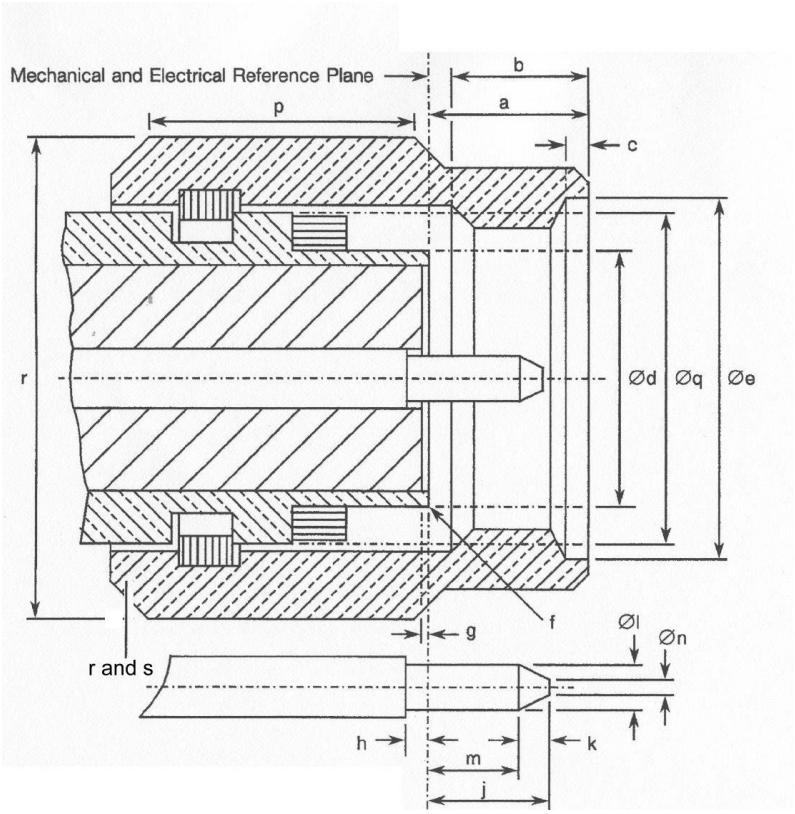

Symbol	Millimetres min	max	notes
a		3.43	
b	2.54		
c	0.38	1.14	
∅d		0.4592	
∅e	6.35		
f		008	Radius or 45° Chamfer
g	0.00	0.20	
h	0.00	0.25	
j		2.54	
k	0.38		
∅l	0.90	9.94	
m	1.27		
∅n		0.38	
p	3.17		
∅q			N/A
r	7.84	8.00	Hexagonal on flat
s		9.20	

Reproduction interdite / Reproduction forbidden

Table 5: *Radiall Part Number*

Variant	Radiall Reference	Designation
01	R404213660	RF fixed load SMA DC - 22GHz - Stainless steel passivated
02	R404210680	RF fixed load SMA DC - 22GHz - Reduced size - Gold plated with nickel underplate

Reproduction interdite / Reproduction forbidden

Table 6: *Measurements and inspections on completion of environment and endurance tests*

N°	Radiall Generic Spec. RAD-GEN-ATCH-002		Measurements and Inspections		Symbol	Limits		Unit
	Environmental and Endurance Test (1)	Test Method and Conditions	Identification	Conditions		Min	Max	
01	Vibration	Para. 13.2.6 of Generic specification and figure 2 of this specification	**Initial measurements** Impedance VSWR **During Last Cycle** Intermittent contact **Final measurement** Visual Examination Resistance change VSWR change	 Table 2 Table 1 >0.5ms No open or short circuits No damage Table 3 Table 3	 Z VSWR - - ΔR ΔVSWR	 Record values Record values - - - 2 –4	 2 +4	 Ω - - - Ω %
02	Shock	Para 13.2.7 of Generic specification and figure 2 of this specification	**Initial measurements** Impedance VSWR **Final measurement** Visual Examination Resistance change VSWR change	 Table 2 Table 1 No damage Table 3 Table 3	 Z VSWR - ΔR ΔVSWR	 Record values Record values - - 2 –4	 2 +4	 Ω - - Ω %
03	Rapid Change of Temperature	Para 13.2.8 of Generic specification	**Initial measurements** Impedance VSWR **Final measurement** Visual Examination Resistance change VSWR change	 Table 2 Table 1 After recovery time of 24±2hrs No damage Table 3 Table 3	 Z VSWR - ΔR ΔVSWR	 Record values Record values - -2 –4	 2 +4	 Ω - - Ω %
04	Climatic sequence	Para 13.2.9 of Generic specification Dry heat: para 13.2.9.1 of Generic specification Cold heat: para 13.2.9.3 of Generic specification	 Resistance drift (2) Resistance drift (2) **Final measurement** Visual Examination Resistance change VSWR change	 At +125°C, At -55°C, After recovery time between 1 hr and 24 hrs No damage Table 3 Table 3	 TC_R TC_R - ΔR ΔVSWR	 -2 -4	 3.10^{-4} 3.10^{-4} 2 +4	 Ω/Ω/°C Ω/Ω/°C - Ω %
05	Coupling proof torque	Para 13.2.10 of Generic specification	Interface dimensions	Para 13.2.11	-	Figure of para 13.2.11		-
06	Mating and unmating forces	Para 13.2.11 of Generic specification	Torque	Para 13.2.11	-	-	24	N.cm
07	Operating Life	Para 13.2.12 of Generic specification and table 3 and 4 of this specification	**Initial measurements** Impedance VSWR **Final measurement** Visual Examination Resistance change VSWR change	 Table 2 Table 1 No damage Table 3 Table 3	 Z VSWR - ΔR ΔVSWR	 Record values Record values - - 2 –4	 +2 +4	 Ω - - Ω %
08	RF leakage	Para 13.2.13 of Generic specification	**RF leakage**	Table 2	E	-	-90	dBi
09	Peak power	Para 13.2.14 of Generic specification and table 2 of this specification	**Final measurement** Impedance	Table 2	Z	Table 1		
10	Permanence of marking	Para 13.2.16 of Generic specification	**Final measurement** Visual Examination	No corrosion or obliteration of marking	-	-		-

Notes:
(1) The tests in this table refer to either paragraph 11 and 12 of Generic specification and shall be used as applicable
(2) Measurement to be made on 2 samples only.

Reproduction interdite / Reproduction forbidden